INSTALLATION NOTES:

1. USE M3 X 25 OR #5 X 1" SCREWS TO MOUNT (NOT SUPPLIED)
2. DOOR PLUS FRAME THICKNESS MUST EQUAL LATCH GRIP + 2±5 [.08±.2] TO MOUNT KEEPER

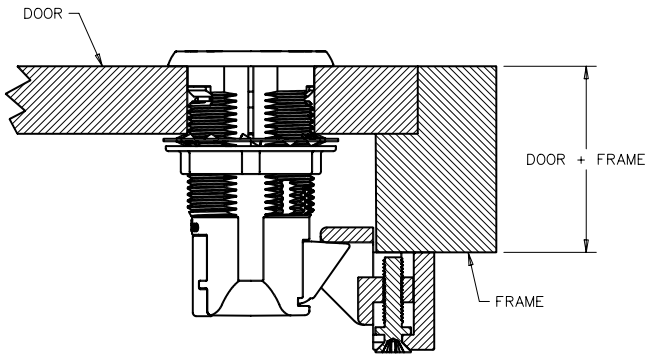

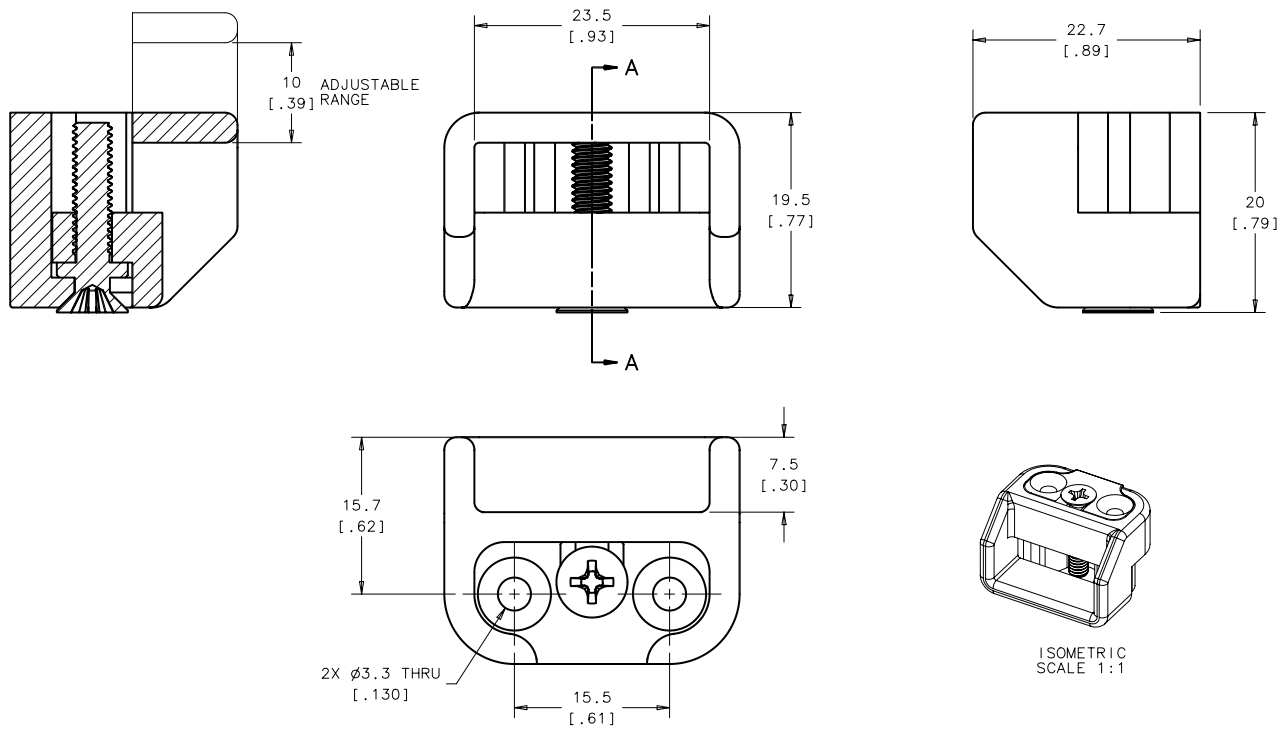

REV	DATE	DRAWN/CHKD	DESCRIPTION	PART NUMBER	MATERIAL	FINISH
1	15JUN2005	JWJ	ADDED INSTALLATION	MP-5113	FIXED KEEPER	ACETAL
					MOVING KEEPER	ACETAL
					ADJUSTING SCREW	BRASS

southco®

PROPRIETARY ITEM - EXCEPT FOR USES EXPRESSLY GRANTED IN WRITING INFORMATION DISCLOSED HEREON IS CONFIDENTIAL AND ALL RIGHTS PATENT AND OTHERWISE ARE RESERVED BY SOUTHCO, INC.

ADJUSTABLE KEEPER

DATE	DRAWN	CHKD	SCALE
02MAY2005	JWJ		2:1

DRAWING NUMBER J-MP-5113

ALL DIMENSIONS WITHOUT TOLERANCES ARE FOR REFERENCE ONLY.

THIRD ANGLE PROJECTION

A3 PAPER SIZE